FINE CONTROLS (UK) LTD

Fine Controls have been supplying process controls & instrumentation equipment since 1994, & now serves an ever expanding customer base, both in the UK & globally.

We offer a full range of valve & instrumentation products & services, with our product rangerepresenting leading technologies & brands:

Flow: Flow Meters & Transmitters, Flow Switches, Flow Control Valves & Batch Control Systems

Temperature: Temperature Probes & Thermowells, Temperature ransmitters,Temperature Regulators & Temperature Displays

Level: Level Transmitters & Switches

Pressure: Pressure Gauges &Transmitters, Precision & High Pressure Regulators & I-P Converters, Volume boosters.

Precision Pneumatics: Pressure Regulators, I-P Converters, Volume Boosters, Vacuum Regulators

Valves: Solenoid & Pneumatic Valves, Control Valves & Positioners, Actuated Ball, Globe or Diaphragm Valves & Isolation Valves

Services: Repair, Calibration, Panel Build, System Design & Commissioning

A rotork Brand FAIRCHILD

bürkert

SIEMENS

alcon SOLENOID VALVES A rotork Brand

MIDLAND-ACS A rotork Brand

Honeywell

Bourdon Baumer Group

SOLDO CONTROLS A rotork Brand

Fine Controls (UK) LTD, Bassendale Road, Croft Business Park,
Bromborough, Wirral, CH62 3QL UK
Tel: 0151 343 9966
Email: sales@finecontrols.com

bürkert
FLUID CONTROL SYSTEMS

Universal process controller eCONTROL

- Continuous, 2-point, 3-point and On/Off control
- Ratio control function
- Sensor inputs (4-20 mA, 0-10 V, frequency, RDT)
- Control of proportional, process and motor valves
- Bürkert proportional valves and flow meters are memorized
- 1/16 DIN size panel version

Type 8611 can be combined with...

Type 6223
Proportional Valve

Type 2301+8696
Globe control valve system

Type 8012
INLINE flow sensor

Type 8314
Pressure transmitter 4-20 mA

Type 8417
RTD sensor

Type 8222
neutrino transmitter

Thanks to its compact design, the universal 8611 controller is especially designed for compact control system applications.
It is compatible and tested with all Bürkert proportional valves and sensors and can be connected with every none-Bürkert Control valve by standard signal (4-20 mA, 0-10 V or PWM-output).
The proportional & Integral (PI) process controller is equipped with many additional functions.
The process value feedback can be supplied as one of three analog inputs; a standard signal (4-20 mA/0-10V)), frequency or RTD signal; directly to the universal controller.
The process switching points can be set via a 4-20 mA or 0-10 V signal or with the keypad.
For temperature specific control, it is possible to set a cascade structure with both temperature and flow as inputs.
Thanks to the proportional control capabilities, a wide range of control functions can be performed in a variety of liquids and gas medias.

Fields of application:

- Flow control, Ratio control
- Pressure control
- Temperature control
- Conductivity control
- pH control
- Level control

General data	
Materials	
Housing, cover	PC, +20% glass fibre
Front panel folio / Screws	Polyester / Stainless steel
Multipin	CuZn, nickel-plated
Wall-mounting holder	PVC
Display	Dual-line 8-digit LCD with backlight
Electrical connections	Multipin: M12-8pin, M8-4pin, M8-3pin Insert for connecting to components according to DIN EN 175301-803 (previously DIN 43650, Form A).
Voltage supply cable	0.5 mm^2 max. cross section, max. 100 m, shielded
Environment	
Ambient temperature	0°C up to +70°C (operating and storage)
Relative humidity	≤ 80%, without condensation
Standards and approvals	
Protection class	IP65
Standard	
EMC, CE	EN 61326
Approvals	
UL-Recognized for US and Canada	61010-1 + CAN/CSA-C22 No.61010-1

DTS 1000089169 EN Version: L Status: RL (released | freigegeben | validé) printed: 01.02.2011

Electrical data	
Power supply	24 V DC ±10%, filtered and regulated
Power consumption	approx. 2 W (without valve - without sensor input)
Input	
Setpoint	
Standard 4-20 mA	Sourcing mode Max. input impedance: 70 Ω Resolution: 5.5 µA
Standard 0-10 V	Max. input impedance: 11.5 kΩ Resolution: 2.5 mV
Sensors	
Standard 4-20 mA	Sourcing mode Max. input impedance: 70 Ω Resolution: 5.5 µA
Standard 0-10 V	Max. input impedance: 11.5 kΩ Resolution: 2.5 mV
Frequency	
Input 1	External sensor min. 0.25 Hz / max. 1 kHz input impedance: >1 kΩ Signal type: Sinus, square, triangle pulse (> 3000 mVpp, max. 30 Vpp)
Input 2	Internal Hall sensor min. 0.25 Hz / max. 1 kHz (only with Bürkert Type S030 flow fitting)
Pt100 (2 wires)	Measuring range: 0°C...200°C Measuring current: 1 mA Measuring error: <0.5°C
Binary input	Input impedance: 10 kΩ Operating threshold: 3 V-30 V Max. frequency: 1 kHz
Outputs	
Continuous signal	Standard signal 4-20 mA max. loop resistance: 680 Ω accuracy: 0.5% Standard signal 0-10 V max. current: 20 mA accuracy: 0.5%
Discontinuous signal	2 transistor outputs for PWM*) or PTM*) signal Control frequency 1.2 kHz-20 Hz resolution max.: 16 Bit (depend from frequency) max. current load: 1.5 A switching voltage: 24 V DC
Binary output	Transistor output (PNP) (configurable) max. current load: 1.5 A switching voltage: 24 V DC
Power supply sensor / actuator	24 V DC, max. 1 A
Total load of all outputs	max. 1.5 A
Controller modes	PI-Control, 2 point and 3 point, cascaded Up to 2 Binary out with windows and hysteresis mode

*) PWM = pulse width modulation
PTM = pulse time modulation

DTS 1000089169 EN Version: L Status: RL (released | freigegeben | validé) printed: 01.02.2011

Assembly versions

Mounting on flow-fitting
eCONTROL Fitting-mounting

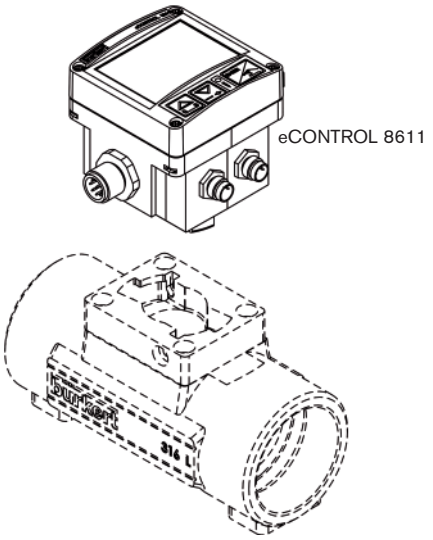

Mounting on a proportional valve
eCONTROL Valve-mounting

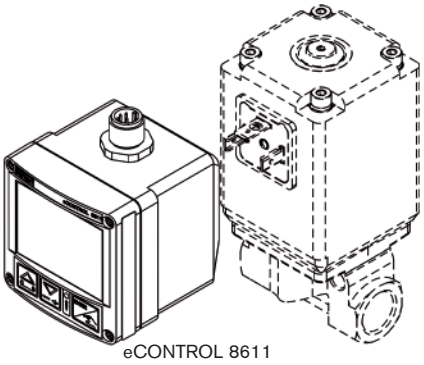

Mounting in panel
eCONTROL Panel-mounting

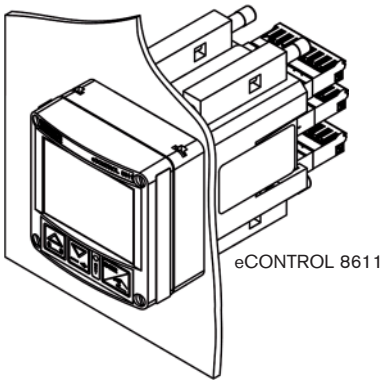

Mounting on a wall
eCONTROL Wall-mounting

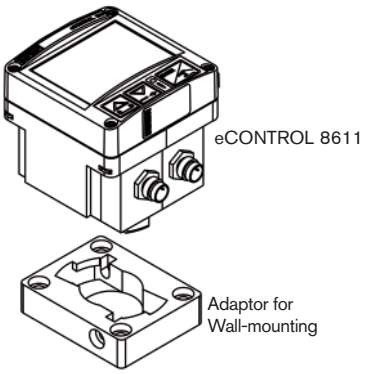

Mounting on a rail
eCONTROL Rail-mounting

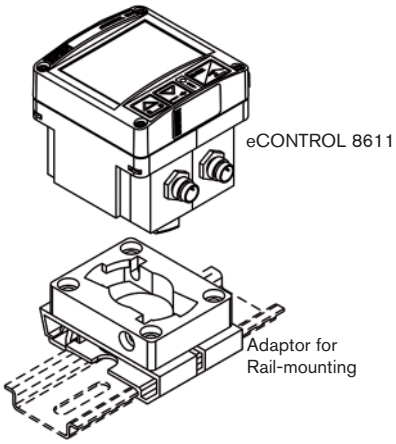

DTS 1000089169 EN Version: L Status: RL (released | freigegeben | validé) printed: 01.02.2011

Dimensions [mm]

8611 - eCONTROL Fitting-mounting

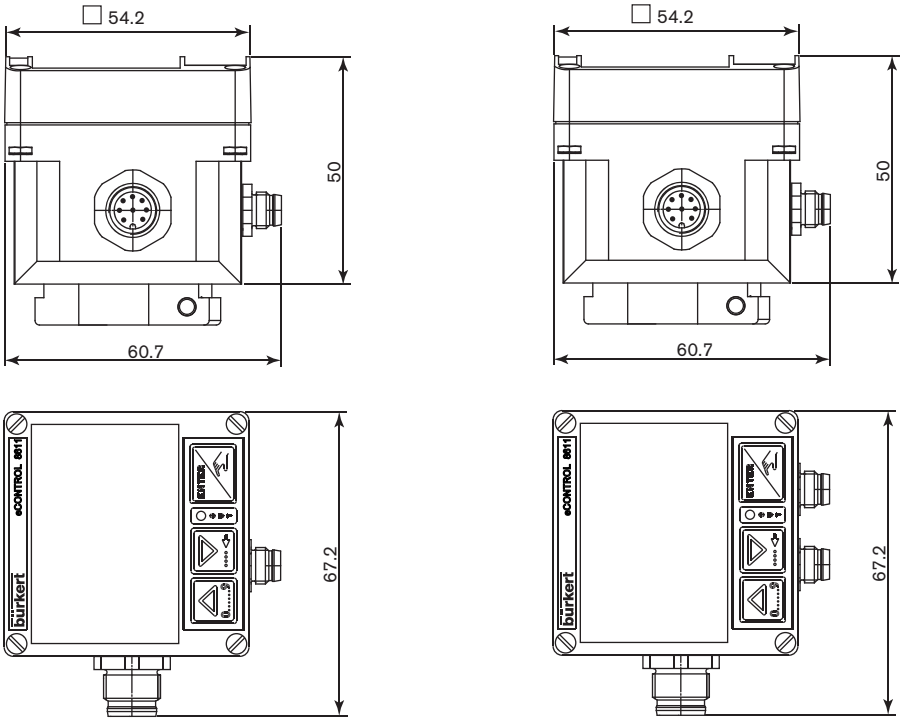

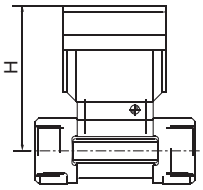

DN [mm]	H [mm]
06	79.5
08	79.5
15	84.5
20	82.0
25	82.2
32	85.8
40	89.6
50	95.7
65	98.7

8611 eCONTROL Valve-mounting

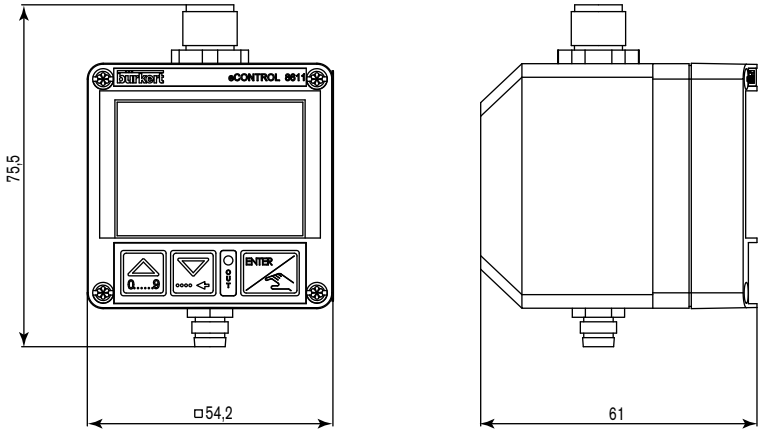

Dimensions [mm] (continued)

8611 eCONTROL Panel-mounting

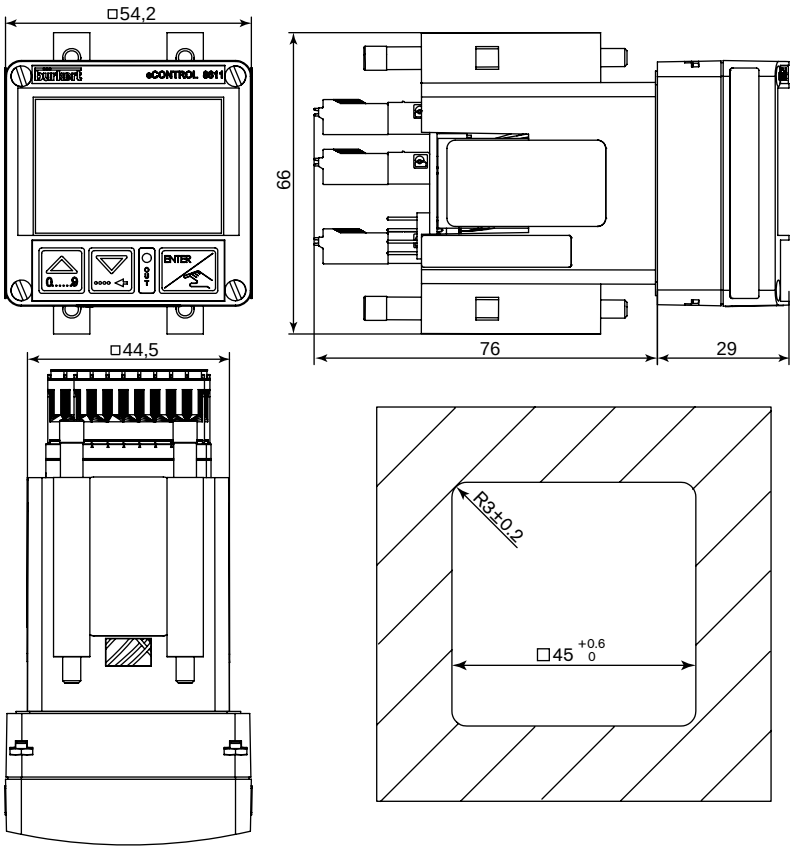

8611 eCONTROL Wall-mounting

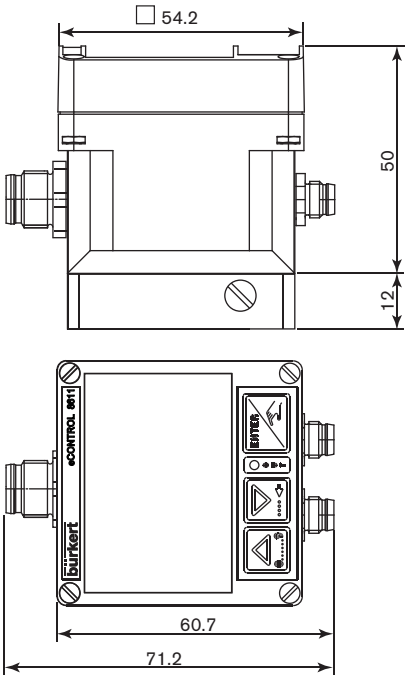

8611 eCONTROL Rail-mounting

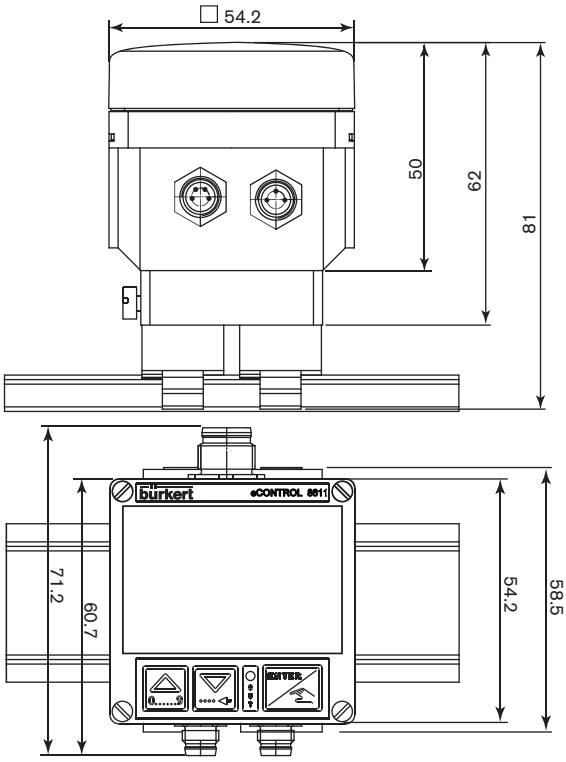

Connection feasibility and controller versions

Assembly	Flow sensor fitting mounting		Wall- and rail-mounting	Valve-mounting
Sensor	integrated HALL-sensor, without external sensor input	integrated HALL-sensor with external sensor input	without HALL-sensor, with external sensor input	without HALL-sensor, with external sensor input
Control	▪ Flow control	▪ Temperature control with flow display ▪ Temperature control with flow input for cascade control ▪ Ratio control	▪ Temperature control ▪ Pressure control ▪ Flow control	▪ Temperature control ▪ Pressure control ▪ Flow control
	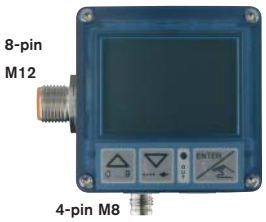	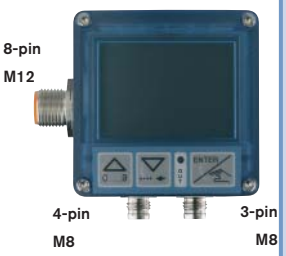		

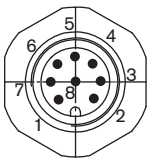

8-pin M12 plug

- Power supply 24 V DC
- Set point value (0-10 V / 4-20 mA)
- Binary input
- process value output (0-10 V / 4-20 mA)
- PI-control output (0-10 V / 4-20 mA)
- Binary output

3-pin M8 plug

Sensor input
4-20 mA / 0-10 V, frequency or RDT
Sensor power supply 24 V DC

4-pin M8 plug

PI-control output :
- 1 x PWM output
- 2 x PTM output
- 0-10 V/4-20 mA output and power supply actuator 24 V DC (only Item no. 182 383)

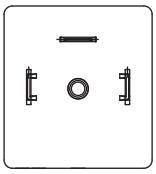

DIN 175301-803

PWM output for Solenoid control valve

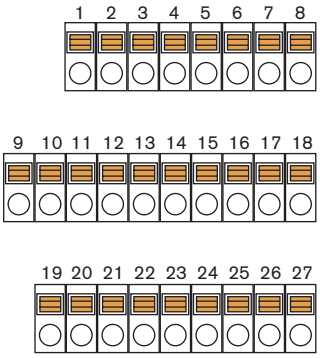

Terminal block 1

Terminal block 2

Terminal block 3

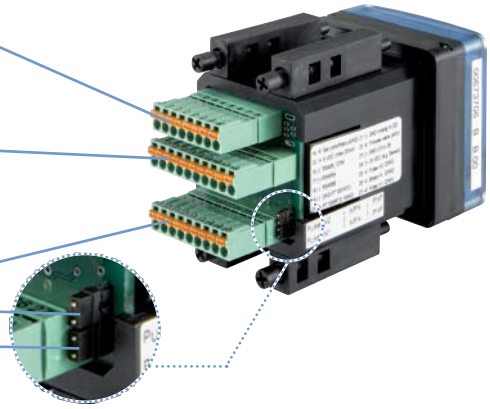

Jumper 1 (NPN/PNP)

Jumper 2 (NPN/PNP)

Ordering chart for universal Controller Type 8611

A controller Type 8611 consists of:

for Fitting-mounting
- an electronic module 8611
- an INLINE fitting S030 (DN06 - DN65)

(Refer to corresponding data sheet - has to be ordered separately)

for Wall-mounting
- an electronic module 8611
- a wall-mounting adaptor (included)

for Rail-mounting
- an electronic module 8611
- a rail-mounted adaptor (included)

for Valve-mounting
- an electronic module 8611
- a proportional valve

(Refer to corresponding data sheet of the proportional valve - has to be ordered separately

for Panel-mounting
- an electronic module 8611
- 4 mounting brackets and 1 sealing (included)

Mounting disposition	Sensor input externe	Sensor input interne	controller outputs (*)		Power supply	Setpoint setting	Process value output	Binary In/Out	Item no.
Fitting 	-	Flow rate (Fitting S030)	1 x PWM 2 x PTM	4-20 mA 0-10 V	24 V DC	4-20 mA 0-10 V	4 -20 mA (*) 0-10 V	1 x Bin In 1 x Bin Out	177 455
	Temperature (RDT)	Flow rate (Fitting S030)	1 x PWM 2 x PTM	4-20 mA 0-10 V	24 V DC	4-20 mA 0-10 V	4 -20 mA (*) 0-10 V	1 x Bin In 1 x Bin Out	177 458
	Ratio or Temp. (4-20 mA / 0-10 V)	Flow rate (Fitting S030)	1 x PWM 2 x PTM	4-20 mA 0-10 V	24 V DC	4-20 mA 0-10 V	4 -20 mA (*) 0-10 V	1 x Bin In 1 x Bin Out	177 463
	Ratio (Frequency-NPN)	Flow rate (Fitting S030)	1 x PWM 2 x PTM	4-20 mA 0-10 V	24 V DC	4-20 mA 0-10 V	4 -20 mA (*) 0-10 V	1 x Bin In 1 x Bin Out	208 048
Wall 	Flow rate (frequency- NPN)	-	1 x PWM 2 x PTM	4-20 mA 0-10 V	24 V DC	4-20 mA 0-10 V	4 -20 mA (*) 0-10 V	1 x Bin In 1 x Bin Out	177 454
	Temperature (RDT)	-	1 x PWM 2 x PTM	4-20 mA 0-10 V	24 V DC	4-20 mA 0-10 V	4 -20 mA (*) 0-10 V	1 x Bin In 1 x Bin Out	177 457
	All sensors with standard signal (4-20 mA / 0-10 V)	-	1 x PWM 2 x PTM	4-20 mA 0-10 V	24 V DC	4-20 mA 0-10 V	4 -20 mA (*) 0-10 V	1 x Bin In 1 x Bin Out	177 462
	All sensors with standard signal (4-20 mA / 0-10 V)	-	4-20 mA 0-10 V	-	24 V DC	4-20 mA 0-10 V	-	1 x Bin In 1 x Bin Out	182 383
Rail 	Flow rate (frequency- NPN)	-	1 x PWM 2 x PTM	4-20 mA 0-10 V	24 V DC	4-20 mA 0-10 V	4 -20 mA (*) 0-10 V	1 x Bin In 1 x Bin Out	177 091
	Temperature (RDT)	-	1 x PWM 2 x PTM	4-20 mA 0-10 V	24 V DC	4-20 mA 0-10 V	4 -20 mA (*) 0-10 V	1 x Bin In 1 x Bin Out	177 456
	All sensors with standard signal (4-20 mA / 0-10 V)	-	1 x PWM 2 x PTM	4-20 mA 0-10 V	24 V DC	4-20 mA 0-10 V	4 -20 mA (*) 0-10 V	1 x Bin In 1 x Bin Out	177 460

Mounting disposition	Sensor input externe	controller outputs	Setpoint setting	Process value output	Binary In/Out	Item no.
Proportional valve 	Temperature (Pt100)	1 x PWM	4-20 mA 0-10 V	4-20 mA 0-10 V	1 x Bin In 1 x Bin Out	204 642
	Flow rate (frequency- NPN)	1 x PWM	4-20 mA 0-10 V	4-20 mA 0-10 V	1 x Bin In 1 x Bin Out	204 639
	All sensors with standard signal (4-20 mA / 0-10 V)	1 x PWM	4-20 mA 0-10 V	4-20 mA 0-10 V	1 x Bin In 1 x Bin Out	186 289

Mounting disposition	Sensor input	controller outputs	Setpoint setting	Process value output	Binary In/ Out	UL Rec-ognition	Item no.
Panel 	2 x Frequency (NPN/PNP) 1 x 4-20 mA / 0-10 V 1 x RTD	1 x PWM 2x PTM 1x 4-20 mA/0-10 V	4-20 mA 0-10 V	4 -20 mA (*) 0-10 V	1 x Bin In 2 x Bin Out	No	210 206
						UL-Recognized	562 655

*** Either PWM/PTM or 4-20 mA/0-10 V selectable as PI-control output. If 4-20 mA/0-10 V selected as PI-output, the process value isn't available.**

Ordering chart for accessories (has to be ordered separately)

	Description	Item no.
	Positioning system 8810 for pneumatic actuators with rail-mount adaptor	204 458
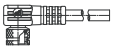	4-pin M8 female right angle connector with self-locking threaded joint and 2 m molded cable (valve output)	918 718
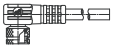	4-pin M8 female right angle connector with self-locking threaded joint and 5 m molded cable (valve output)	919 412
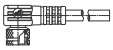	3-pin M8 female right angle connector with self-locking threaded joint and 2 m molded cable (sensor input)	918 717
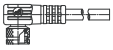	3-pin M8 female right angle connector with self-locking threaded joint and 5 m molded cable (sensor input)	919 410
	4-pin M8 female connector, straight with snap-on connection and 2 m molded cable (valve output)	919 060
	3-pin M8 female connector, straight with snap-on connection and 2 m molded cable (sensor input)	918 039
	8-pin M12 female connector, straight with screw connection and 2 m molded cable (PUR) (Power supply)	919 061
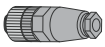	8-pin M12 female connector, straight with screw connection, to assemble (Power supply)	918 998

Ordering chart for spare parts (has to be ordered separately)

	Description	Item no.
	Wall-mounting adaptor	427 098
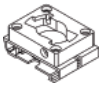	Rail-mounting adaptor	655 980
	Mounting brackets (Set of 4 pieces)	560 225

DTS 1000089169 EN Version: L Status: RL (released | freigegeben | validé) printed: 01.02.2011

Examples of applications

Cascaded temperature control with process control valve

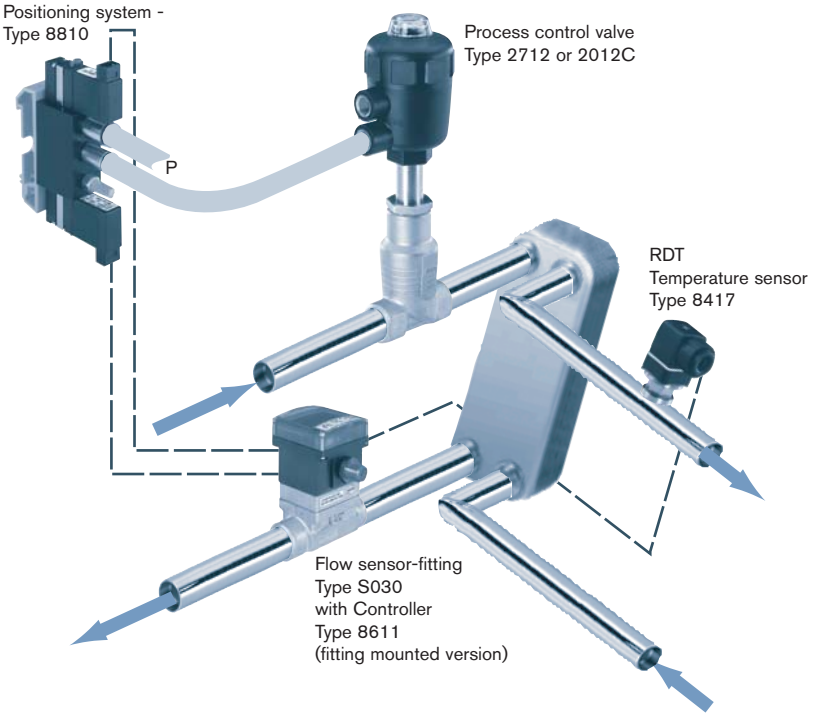

Flow control with process control valve

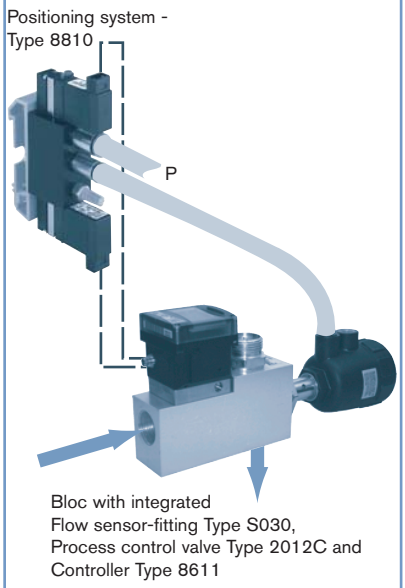

Temperature control with solenoid control valve

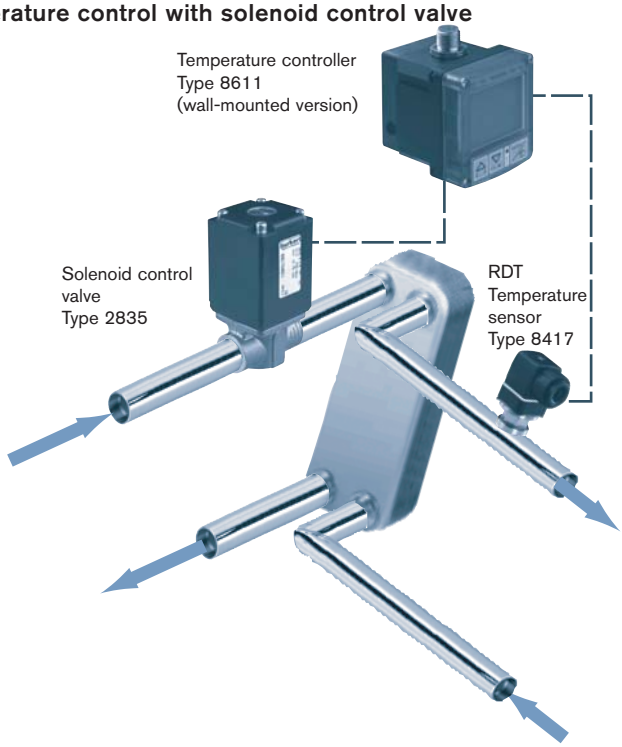

Multi channel solution

with process control valve

with solenoid control valve

*To find your nearest Bürkert facility, click on the orange box → www.burkert.com

In case of special application conditions,
please consult for advice.

Subject to alteration.

1102/10_EU-en_00895018

DTS 1000089169 EN Version: L Status: RL (released | freigegeben | validé) printed: 01.02.2011