FINE CONTROLS (UK) LTD

Fine Controls have been supplying process controls & instrumentation equipment since 1994, & now serves an ever expanding customer base, both in the UK & globally.

We offer a full range of valve & instrumentation products & services, with our product rangerepresenting leading technologies & brands:

Flow: Flow Meters & Transmitters, Flow Switches, Flow Control Valves & Batch Control Systems

Temperature: Temperature Probes & Thermowells, Temperature ransmitters,Temperature Regulators & Temperature Displays

Level: Level Transmitters & Switches

Pressure: Pressure Gauges &Transmitters, Precision & High Pressure Regulators & I-P Converters, Volume boosters.

Precision Pneumatics: Pressure Regulators, I-P Converters, Volume Boosters, Vacuum Regulators

Valves: Solenoid & Pneumatic Valves, Control Valves & Positioners, Actuated Ball, Globe or Diaphragm Valves & Isolation Valves

Services: Repair, Calibration, Panel Build, System Design & Commissioning

A rotork Brand FAIRCHILD

bürkert

SIEMENS

alcon SOLENOID VALVES A rotork Brand

MIDLAND-ACS A rotork Brand

Honeywell

Bourdon Baumer Group

SOLDO CONTROLS A rotork Brand

Fine Controls (UK) LTD, Bassendale Road, Croft Business Park,
Bromborough, Wirral, CH62 3QL UK
Tel: 0151 343 9966
Email: sales@finecontrols.com

bürkert
FLUID CONTROL SYSTEMS

Digital electropneumatic Process Controller for the integrated mounting on process control valves

- Compact stainless steel design
- Graphic display with backlight
- Easy start-up of process controller and positioner
- Comprehensive range of additional software functions
- Internal control air channel
- Profibus DPV1 or DeviceNet (option)

Type 8693 can be combined with…

Type 2301
Globe
control valve

Type 2300
Angle-seat
control valve

Type 2103
Control
diaphragm valve

Type 8045
Flow sensor

Customised adaption

The compact Process Controller Type 8693 is optimised for integrated mounting on the pneumatic actuators in the process valve series Type 23XX/2103 and is specially designed for the requirements of a hygienic process environment.

The actual value of the process factor is directly supplied to the device as 4-20 mA, PT100 or a frequency signal. The process controller calculates the setpoint for the subordinated positioner through the variance comparison. Due to the analogue feedback all analogue values on the controlling level can be transferred.

The parameterization of process controller and positioner can be carried out automatically. The easy handling and the selection of additional software functions are done either on a big graphic display with backlight and keypad or over a PC interface.

The Positioner registers the valve position without deterioration through a contact-free, analog position sensor. The control of single- or double-acting actuators is done without internal air consumption. Communication interfaces such as Profibus DPV1 or DeviceNet and analogue as well as binary feedback can also be chosen.

Technical data	
Material	
Body	PPS, stainless steel
Cover	PC
Sealing	EPDM
Power supply	24 VDC +/- 10%
Ripple	10%, no technical direct current!
Setpoint setting	0/4 to 20mA and 0 to 5/10 V
Output resistance	0/4 to 20 mA: 180 Ω 0 to 5/10 V: 19 k Ω
Sensor input	4 to 20 mA (180 Ω input resistance) frequency 0 to 1000 Hz (17 kΩ input resistance) PT100 -20 to +220°C (resolution < 0.1°C)
Control medium	neutral gases, air DIN ISO 8573-1
Dust concentration	Class 5 (<40µm particle size)
Particle density	Class 5 (<10mg/m³)
Pressure condensation point	Cass 3 (<-20°C)
Oil concentration	Class 5 (<25mg/m³)
Ambient temperature	0 to +55°C
Pilot air ports	Push-in connector (external ø 6 mm or 1/4") or threaded ports G1/8
Supply pressure	Low air flow rate 0 to 7 bar [1)] High air flow rate 3 to 7 bar
Air input filter	Exchangeable (mesh aperture~0.1mm)
Actuator system	Low air flow rate: ø Actuator 70 / 90 mm High air flow rate: ø Actuator 130 mm
Position detection module	Contact-free, wear-free
Stroke range valve spindle	3 to 28 mm (3 to 45 mm on request)
Installation	as required, preferably with actuator in upright position
Protection class	IP 65/67 according to EN 60529 (NEMA4x in preparation)
Power consumption	< 5 W
Electrical connection	
Multipole connection	M12, 8-pins or 4-pins
Cable gland	2xM16x1,5 (cable-ø10mm) on terminal screws (1,5 mm²)
Bus communication	Profibus DPV1, DeviceNet
Protection class	3 according to VDE 0580
Conformity	CE acc. to EMV2004/108/EG

1) The supply pressure has to be 0,5 - 1 bar above the minimum required pilot pressure for the valve actuator.

Ordering information for TopControl-Control valve systems

A complete TopControl-Control valve system consists of a TopControl Type 8693 and a process valve Type 23XX/2103. The following information is necessary for the selection of a complete control valve:

- **Item no.** of the process controller TopControl **Type 8693** without process valve, see ordering chart on p. 3
- **Item no.** of the selected process valve **Type 23XX/2103** (see separate datasheets, e.g. 2300, 2301 or 2103)

You order two components and receive a complete assembled and certified valve.

When you click on the orange box "More info." below, you will come to our website for the resp. product where you can download the datasheet.

Example of variations of control valves

8693 Process Controller TopControl

Required process valve, example

Complete control valve with required body and port connection

Valve system Continuous ELEMENT Type 8802-GD-J 2301 + 8693

Valve system Continuous ELEMENT Type 8802-YG-J 2300 + 8693

Valve system Continuous ELEMENT Type 8802-DF-J 2103 + 8693

Ordering chart Type 8693 (other versions on request)

Valve function	Communi-cation	Electrical connec-tion	Analogue feedback	Analogue feed-back+ 2 binary outputs	Initiator	Binary input	Pilot air ports	Item no.
Actuator size ø 70 / 90 mm								
Single-acting	No	Cable gland	No	No	No	Yes	Push-in connector external ø 6 mm or 1/4″	176 623
			4 - 20 mA	No	No	Yes	Push-in connector external ø 6 mm or 1/4″	185 141
			No	No	No	Yes	Threaded ports G1/8	185 201
		Multipole	No	No	No	Yes	Push-in connector external ø 6 mm or 1/4″	176 624
			4 - 20 mA	No	No	Yes	Push-in connector external ø 6 mm or 1/4″	185 144
			No	Yes	No	Yes	Push-in connector external ø 6 mm or 1/4″	185 145
			No	No	Yes	Yes	Push-in connector external ø 6 mm or 1/4″	185 140
	Profibus	Multipole	No	No	No	No	Push-in connector external ø 6 mm or 1/4″	185 142
	DeviceNet	Multipole	No	No	No	No	Push-in connector external ø 6 mm or 1/4″	185 143
Actuator size ø 130 mm								
Single-acting	No	Cable gland	No	No	No	Yes	Push-in connector external ø 6 mm or 1/4″	185 146
			4 - 20 mA	No	No	Yes	Push-in connector external ø 6 mm or 1/4″	185 149
			No	No	No	Yes	Threaded ports G1/8	185 147
		Multipole	No	No	No	Yes	Push-in connector external ø 6 mm or 1/4″	185 148
			4 - 20 mA	No	No	Yes	Push-in connector external ø 6 mm or 1/4″	185 150
			No	Yes	No	Yes	Push-in connector external ø 6 mm or 1/4″	185 151
			No	No	Yes	Yes	Push-in connector external ø 6 mm or 1/4″	185 152
	Profibus	Multipole	No	No	No	No	Push-in connector external ø 6 mm or 1/4″	185 153
	DeviceNet	Multipole	No	No	No	No	Push-in connector external ø 6 mm or 1/4″	185 154
Actuator size ø 70 / 90 mm								
Double-acting	No	Cable gland	No	No	No	Yes	Push-in connector external ø 6 mm or 1/4″	185 155
			4 - 20 mA	No	No	Yes	Push-in connector external ø 6 mm or 1/4″	185 158
			No	No	No	Yes	Threaded ports G1/8	185 156
		Multipole	No	No	No	Yes	Push-in connector external ø 6 mm or 1/4″	185 157
			4 - 20 mA	No	No	Yes	Push-in connector external ø 6 mm or 1/4″	185 159
			No	No	Yes	Yes	Push-in connector external ø 6 mm or 1/4″	185 160
	Profibus	Multipole	No	No	No	No	Push-in connector external ø 6 mm or 1/4″	185 161
	DeviceNet	Multipole	No	No	No	No	Push-in connector external ø 6 mm or 1/4″	185 162

Further versions on request

Approvals
CSA

Ordering chart adapter kit (has to be ordered separately)

Descrip-tion	Actuator size	Control function	Item no.
Adapter kit for Type 23xx / 2103	ø 70 / 90 mm	NC / NO / springless (A / B / I)	665 721

Ordering chart accessories

Descrip-tion	Item no.
M12 socket, 8-pins, 2 m assembled cable	919 061
M12 socket, 4-pins, 5 m assembled cable	918 038
M8 socket, 4-pins, 2 m cable, actual process value	918 718
Silencer G1/8	780 779
Silencer, push-in connector	902 662
M8 plug, 4-pins, initiator	917 131

Materials

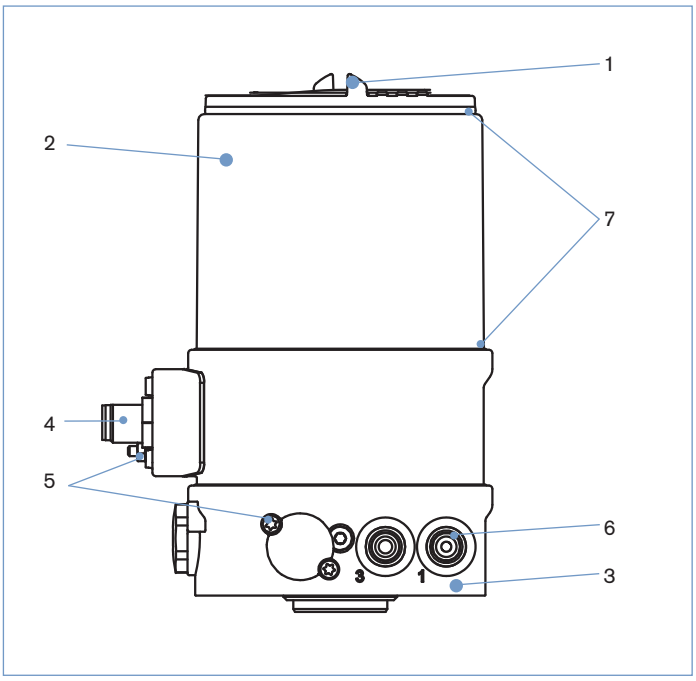

1	**Cover**	PC
2	**Body casing**	Stainless steel
3	**Basic body**	PPS
4	**Plug M12**	Stainless steel
5	**Screws**	Stainless steel
6	**Push-in connector** **Threaded ports G1/8**	POM/stainless steel Stainless steel
7	**Sealing**	EPDM

Dimensions [mm]

Version connection Multipole

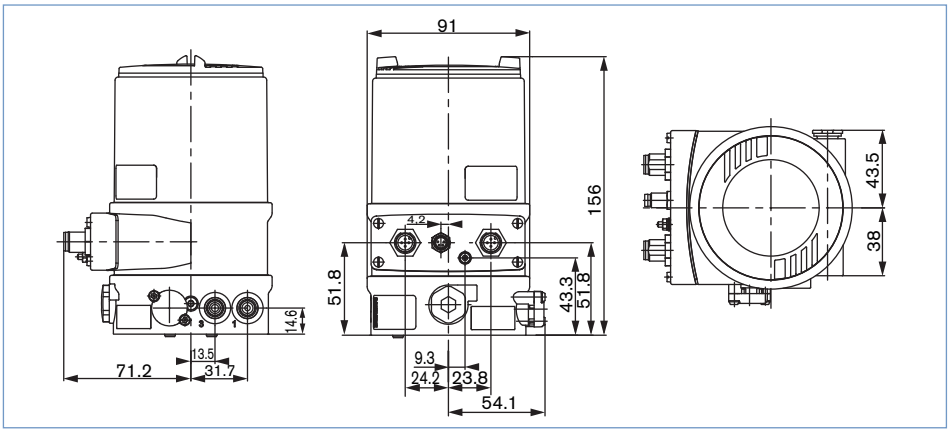

Version connection cable glands

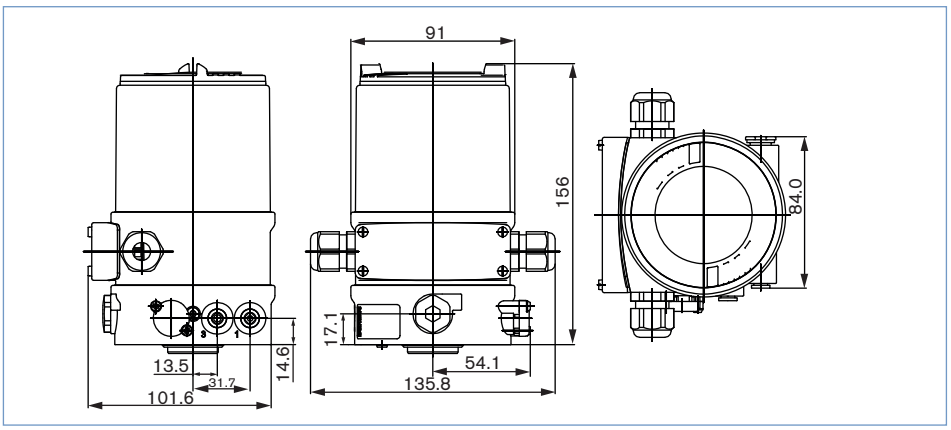

Connection options

Connection Multipole

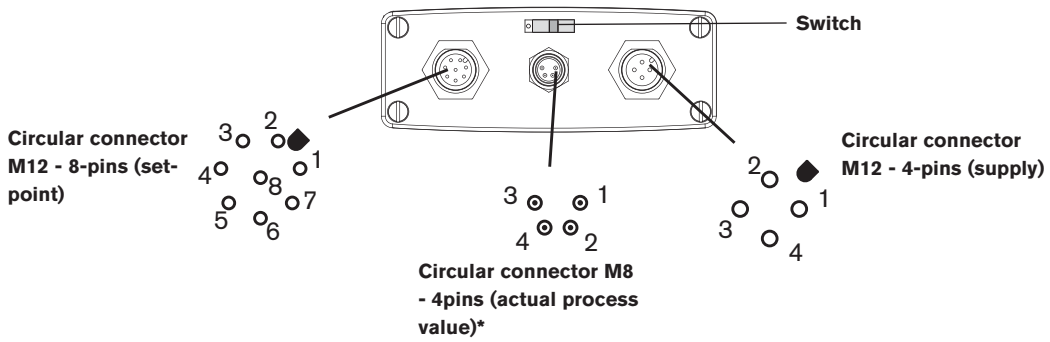

Circular connector M12 - 8-pins (setpoint)

Pin	Configuration
8	Setpoint + (0/4 - 20 mA / 0 - 5/10 V)
7	Setpoint GND

Circular connector M12 - 8-pins (in / output signal)*

Pin	Configuration
6	Analogue feedback +
5	Analogue feedback GND
4	Binary output 1
3	Binary output 2
2	Binary output GND
1	Binary input +

* with the option analogue feedback or binary output

Circular connector M12 - 4-pins (supply)

Pin	Configuration
1	Operating voltages + 24 VDC
3	Operating voltage GND

Circular connector M8 - 4-pins (actual process value)

Input type*	Pin	Configuration	Switch
4-20 mA - internally supplied	1	+24 V transmitter supply	Switch on left
	2	Output from transmitter	
	3	GND	
	4	Bridge after GND	
4-20 mA - externally supplied	1	not assigned	Switch on right
	2	Actual value +	
	3	not assigned	
	4	Actual value -	
Frequency - internally supplied	1	+24 V sensor supply	Switch on left
	2	Clock input +	
	3	Clock input - (GND)	
	4	not assigned	
Frequency - externally supplied	1	not assigned	Switch on right
	2	Clock input +	
	3	Clock input -	
	4	not assigned	
Pt 100 (see notes to the right)	1	not assigned	Switch on right
	2	Process actual 1 (current feed)	
	3	Process actual 2 (GND)	
	4	Process actual 3 (compensation)	

* with the option analogue feedback or binary output

IMPORTANT!
For reasons of wire compensation connect the Pt 100 sensor via 3 wires. Always bridge Pin 3 and Pin 4 on the sensor.

Connection options, continued

Connection cable glands

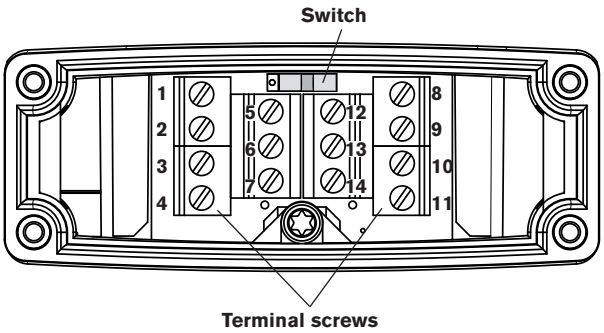

Clamp	Configuration
11	Setpoint + (0/4 - 20 mA / 0 - 5/10 V)
10	Setpoint GND
14	Operating voltages + 24 VDC
13	Operating voltage GND
12	Binary input +
13	Binary input GND
9*	Analogue position feedback +
8*	Analogue position feedback GND
5*	Binary output 1
6*	Binary output GND
7*	Binary output 2

Actual process value

Input type*	Pin	Configuration	Switch
4-20 mA - internally supplied	1	+24 V transmitter supply	Switch on left
	2	Output from transmitter	
	3	Bridge after GND	
	4	GND	
4-20 mA - externally supplied	1	not assigned	Switch on right
	2	Process actual +	
	3	Process actual -	
	4	not assigned	
Frequency - internally supplied	1	+24 V sensor supply	Switch on left
	2	Clock input +	
	3	not assigned	
	4	Clock input - (GND)	
Frequency - externally supplied	1	not assigned	Switch on right
	2	Clock input +	
	3	not assigned	
	4	Clock input -	
Pt 100 (see note to the right)	1	not assigned	Switch on right
	2	Process actual 1 (current feed)	
	3	Process actual 2 (compensation)	
	4	Process actual 3 (GND)	

* with the option analogue feedback or binary output

IMPORTANT!
For reasons of wire compensation connect the Pt 100 sensor via 3 wires. Always bridge Pin 3 and Pin 4 on the sensor.

Signal flow diagram

Process control circuit

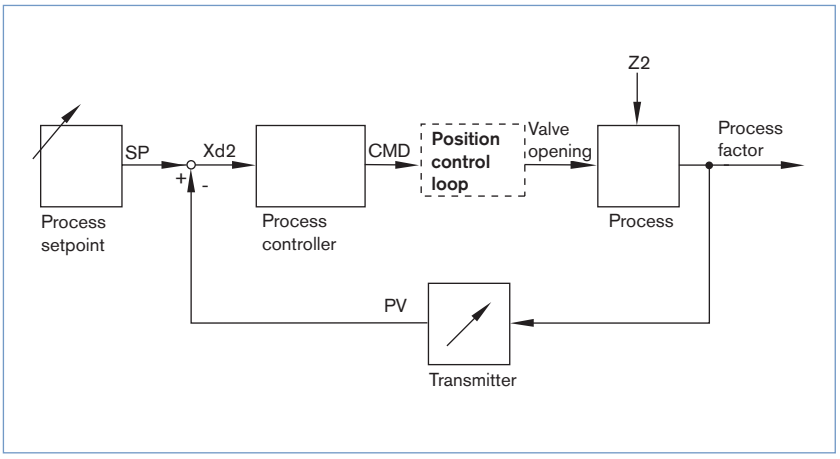

Position control loop

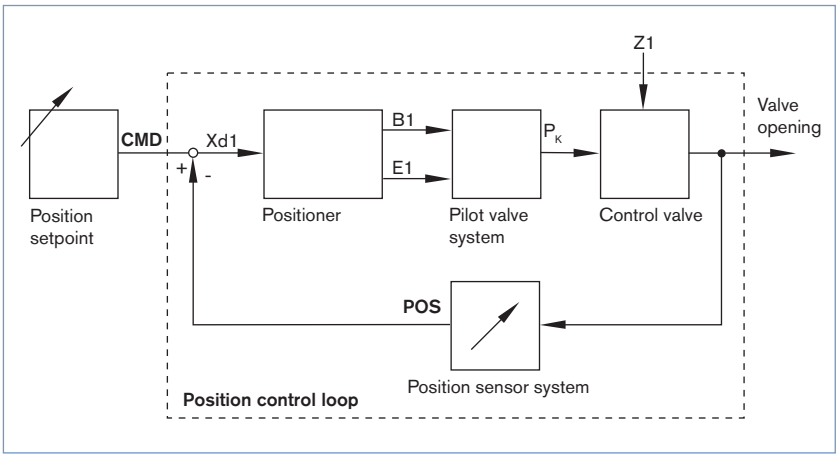

Additional software functions of the TopControl Type 8693

- Automatic start of the control valve systems
- Automatic parameterization of the process control circuit
- Automatic or manual characteristic curves selection
- Setting of the seal and the maximum stroke threshold respectively
- Parameterization of the Positioner
- Manual parameterization of the process controller
- Limitation of the stroke range
- Limitation of the manipulating speed
- Setting of the moving direction
- Configuration of the binary input
- Signal range splitting on several controllers
- Configuration of an analogue or double binary outputs
- Signal fault detection
- Safety position
- Code protection
- Contrast inversion of the display
- Language selection
- Diagnostic functions

Schematic diagram of the Type 8693

Without fieldbus interface

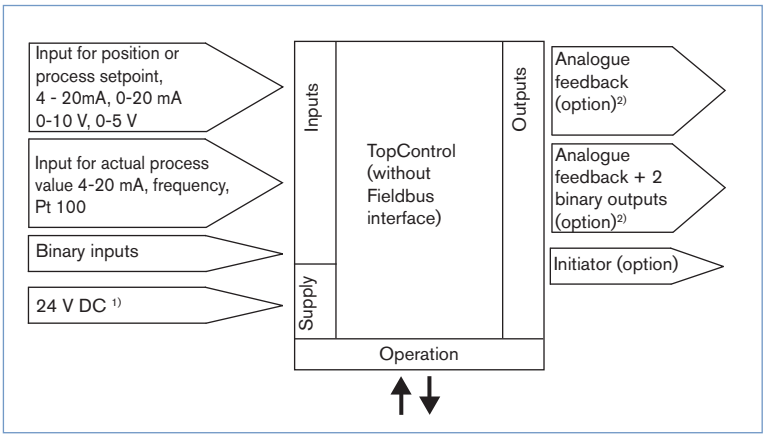

1) The operating voltage is supplied with a 3-wire unit independent from the setpoint signal.
2) Alternative options

With Profibus DP / DeviceNet

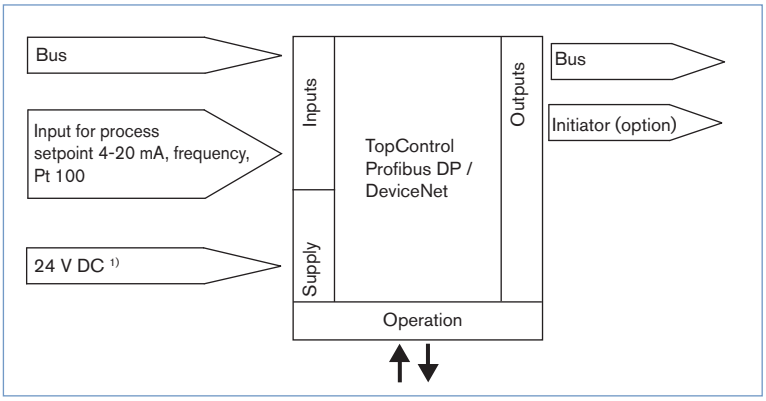

1) The operating voltage is supplied with a 3-wire unit independent from the setpoint signal.